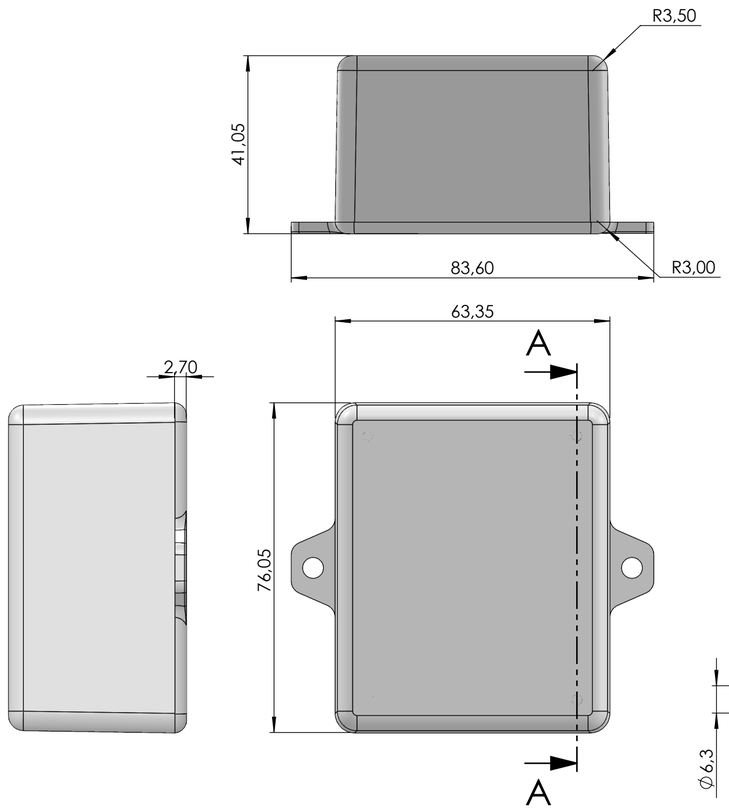

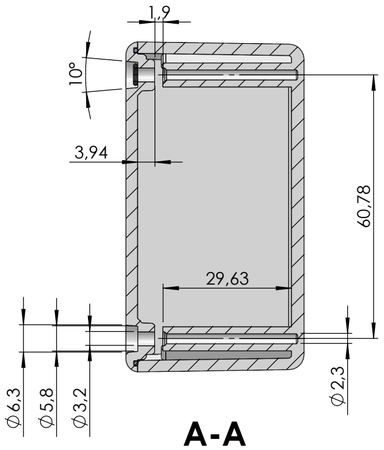

A-A

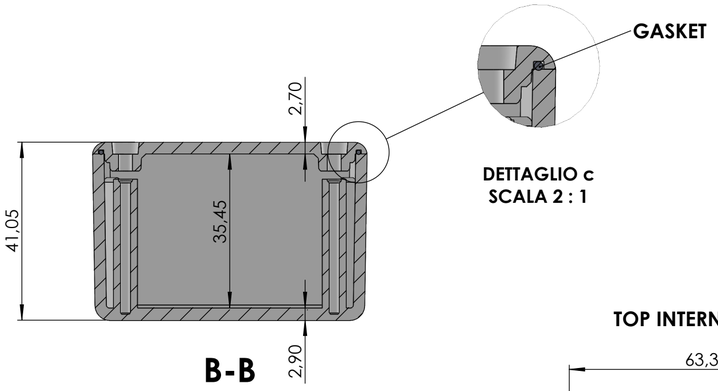

DETTAGLIO c
SCALA 2 : 1

B-B

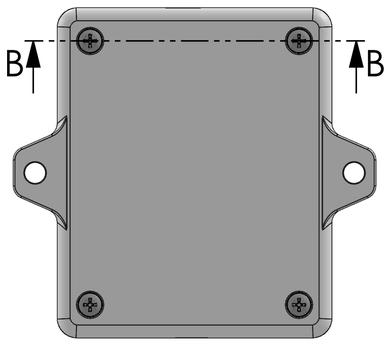

TOP INTERNAL VIEW

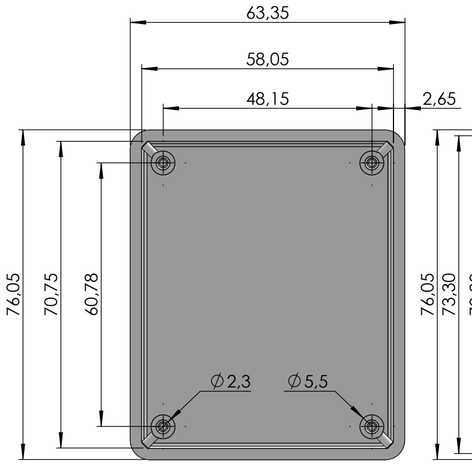

BOTTOM INTERNAL VIEW

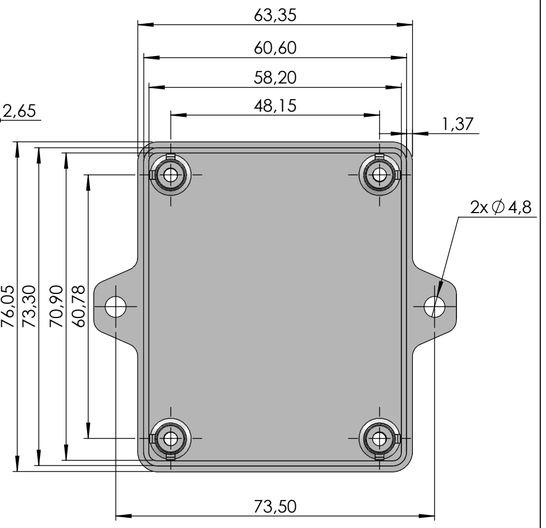

PCB MAX SIZE

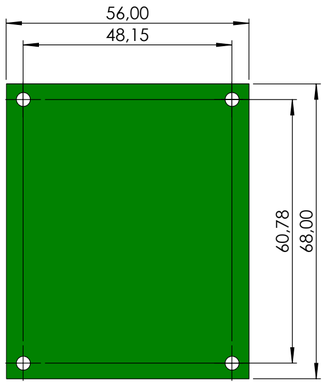

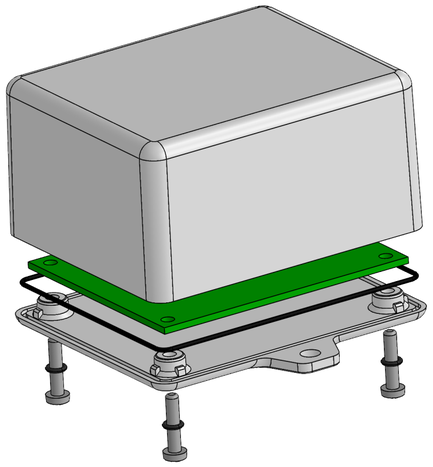

WHITE VERSION

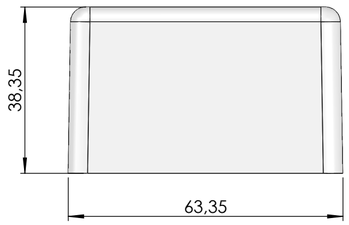

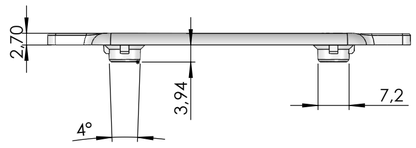

BLACK VERSION

Proprietary and Confidential	**TEKO S.p.A.** Via dell'Industria 5 - S.Lazzaro di Savena - BO - IT		
TEKO ENCLOSURES	***Subject to technical modification without prior notice. Tipographical and others errors do not justify any claim for damages. All dimensions should be verified using an actual moulded part.***		
	Part Number: SR23K-E	*Date:* 04/06/2025	*Sheet:* **1 of 1**	*First angle prj.*
*This document contains proprietary information of **TEKO S.p.a.** and is tendered subject to the conditions that the information be retained in confidence not be reproducer or copied and not be used or incorporated in any product*		*Size:* **A2**	*Scale:* **1:1**